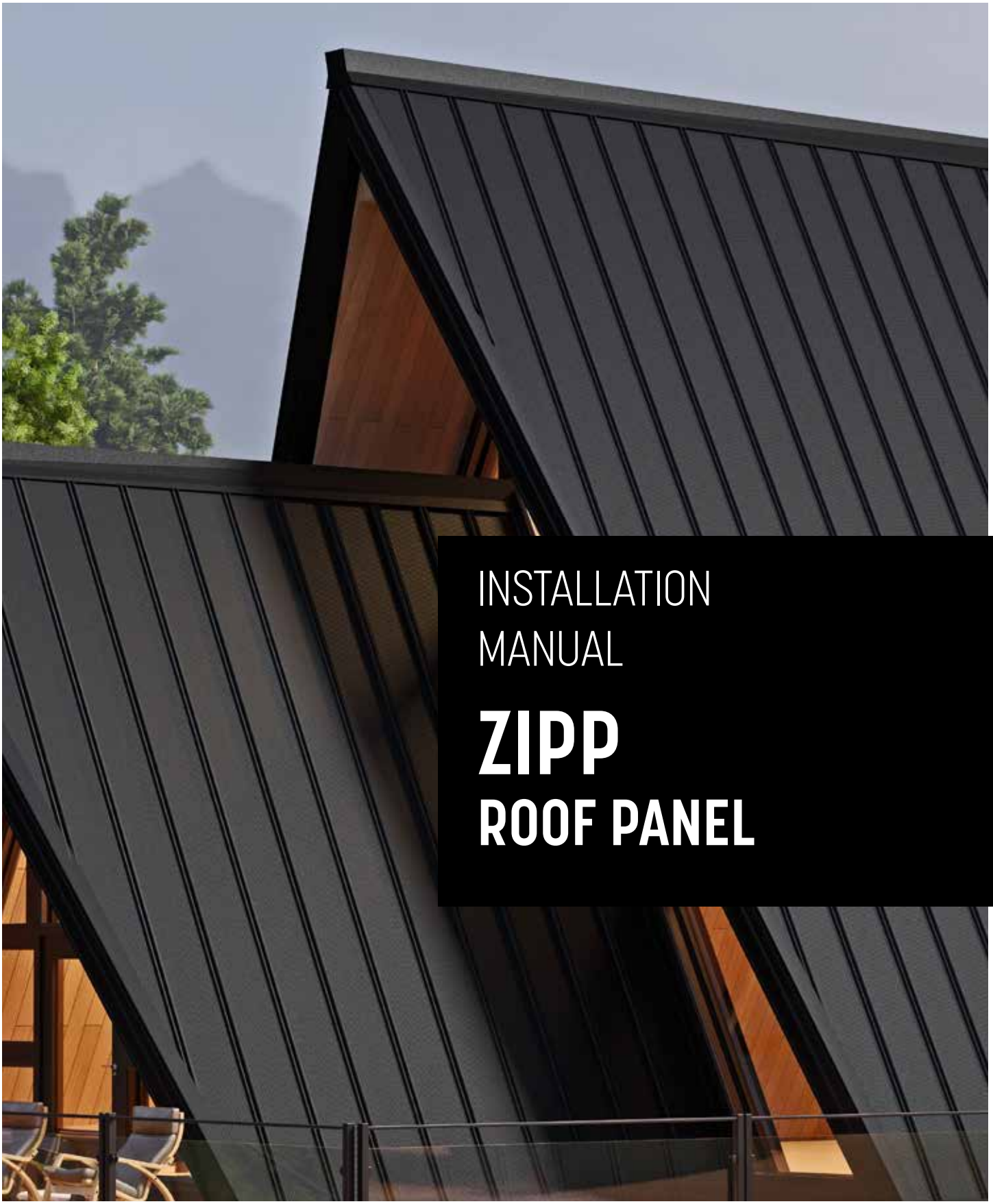

INSTALLATION
MANUAL

ZIPP
ROOF PANEL

ZIPP

THE POWER OF ROOFS

BP2.EU

Contents

! THIS MANUAL IS ILLUSTRATIVE AND DOES NOT RELEASE CONTRACTORS FROM THE OBLIGATION TO FOLLOW THE RULES OF THE ROOFING PRACTICE.

1. Specification of ZIPP roof panels

The ZIPP roof panel is a product resembling classic roof panels, but its wide profile enables exceptionally wide roofing, which significantly shortens roof installation time compared to most roof panels available on the market. On flat surfaces, we have used longitudinal micro-profiling on the entire sheet surface to minimize the possible undulation of the flat panel section.

Technical parameters [in mm]	
Effective width	1065
Total width	1102
Profile height	25
Sheet thickness	0,5–0,7
Sheet length	min. 1000 max. 8000

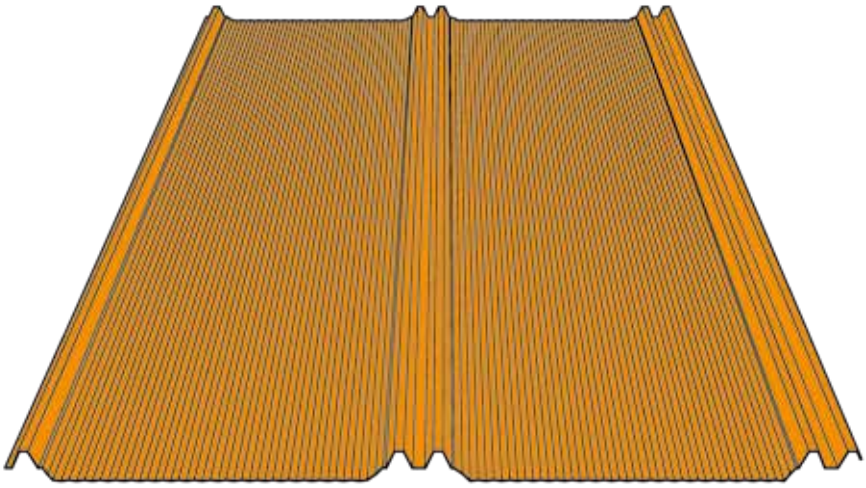

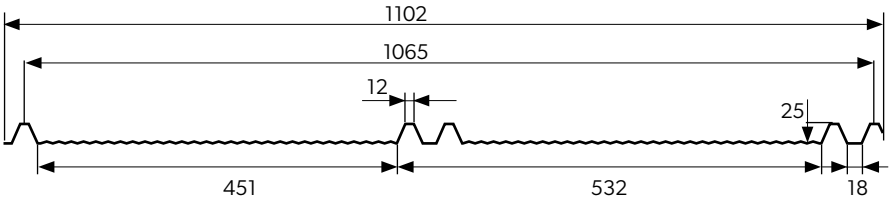

[mm]

2. ZIPP flashing system

The flashings are made of sheets characterized by the same palette of coatings and colours as our steel roof tiles, trapezoidal sheets and roof panels.

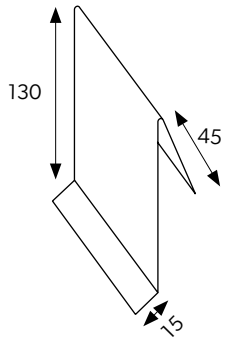

WIND BRACE II (PANEL END)

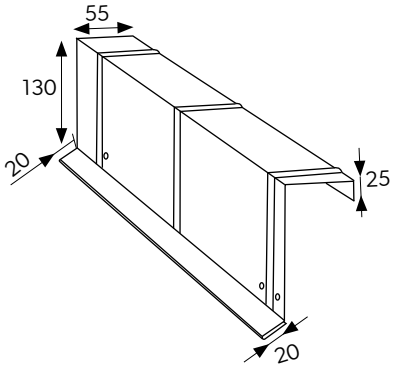

WIND BRACE III (WHEN USING A WIND BRACE BATTEN))

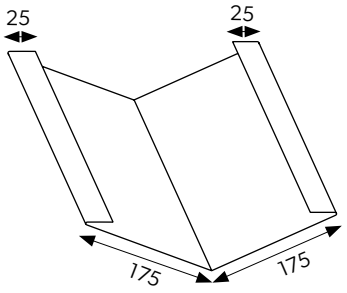

VALLEY GUTTER

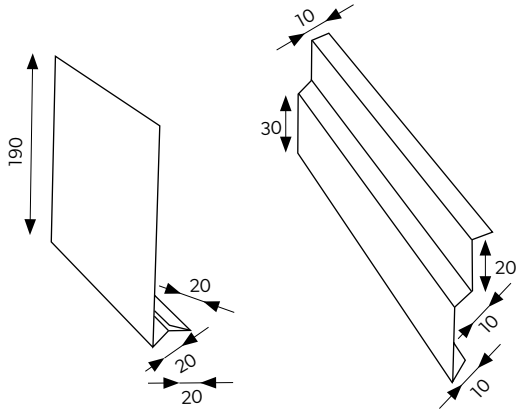

UNIVERSAL VERGE TRIM / DILATATION STRIP EXTENSION OF THE WIND BRACE

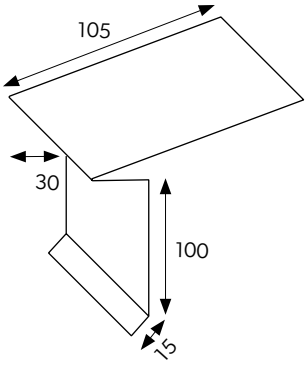

STARTING DRIP EDGE

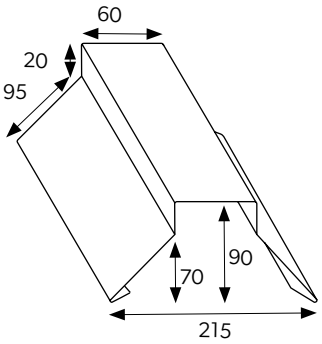

TRAPEZOIDAL RIDGE TILE

We offer standard flashings with a length of 2m and a thickness of 0.5mm as well as custom flashings up to a length of 8 m and a thickness of 2 mm.

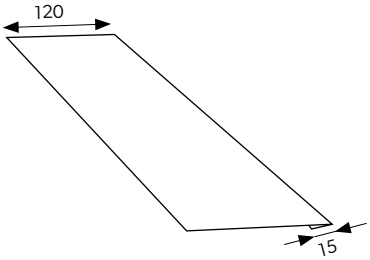

PANEL CONNECTOR FLAT STRIP

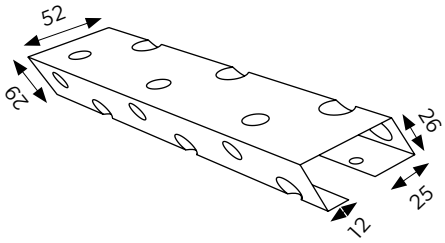

UNIVERSAL VENTILATION FLASHING

3. General recommendations

Transport

Vehicles used for transport should have a crate adapted to the length of the sheets. Damage to the base varnish is not subject to complaint. When handling the sheets during manual unloading, the number of people should be selected in such a way as to prevent the sheets from moving one over the other.

Rules for handling the sheets

The manufacturer is not liable for differences in the colour shades, appearance of the coating and dimensional deviations (within tolerances approved based on standards applicable to a given product) between different orders. There may be a slight undulation of the sheets' surface (especially in the standard polyester coating), which is a normal phenomenon. Aluzinc and coated sheets cannot be stored in original packaging for more than 2 weeks from the production date. After this time, cut the packaging, tear off the protective foil (if any) from the sheets, and put thin spacers between the sheets. Galvanized sheets may only be stored in dry and ventilated rooms. If there is moisture in transport, immediately separate the sheets and dry them - otherwise white corrosion will occur. Total storage time cannot exceed 5 months since the production date. Sheets without organic coatings yet with metallic coatings with a thickness of Z200, AZ150 and ZA255 can be used inside buildings in environments with corrosivity categories C1 and C2 according to PN-EN ISO 12944-2: 2001.

Cutting the steel sheet

It is not allowed to cut the sheets with tools that cause thermal effect (sudden increase of temperature), e.g. angle grinder. This causes damage to the organic and zinc coating and thus leads to corrosion accelerated by hot filings melting into the sheet surface. To cut the sheets, use a nibbler or manual scissors if the sections are short.

NOTE - one of the guarantee conditions is to protect open cut edges of coated sheet with lacquer.

Maintenance

In case of coating damage caused during transport, installation and treatment, carefully clean the damaged surface of dirt and grease and coat the area with lacquer. Edges of the roof not protected with lacquer may delaminate. It is a natural phenomenon and does not constitute grounds for a complaint. It is recommended to control the roof every year in order to perform maintenance works.

4. Types of substrate for the ZIPP roof panel installation

FIG.1: The recommended substrate for ZIPP roof panels is full boarding made of planed boards or 22 mm thick OSB. A spacer membrane should be used on the prepared substrate.

FIG.2: If the substrate uses openwork boarding, a highly vapour-permeable roof membrane should be used. The spacing between the boards should be in the range of 5-100 mm. This solution may cause a slight but noticeable noise of the steel sheet. It is recommended to use a soundproofing tape min. 10 cm wide, applied in the centre of each panel. If need be, the strips of the roofing membrane should be made of three parts and attached to the boards with a tacker. The soundproofing will additionally raise the panel in its centre, thus minimizing the possibility of its undulation.

FIG.3: installation on battens involves using 40x50 mm battens with a spacing not exceeding 200 mm. In the case of installation on battens, it is recommended to use ZIPP roof panels with a SOUNDCONTROL sound-absorbing coating.

NOTE

IT IS NOT RECOMMENDED TO CARRY OUT INSTALLATION ON BATTENS WHERE LONGITUDINAL JOINING OF SHEETS IS PROVIDED.

ASSEMBLY TIP

Full boarding is recommended.

The substrate should be made in accordance with the principles of roofing practice.

The battens must be perfectly level.

FIG.1

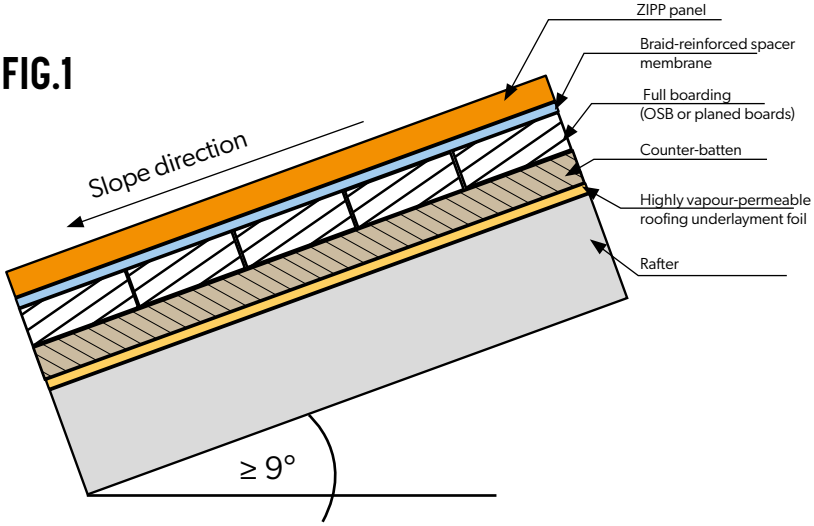

FIG.2

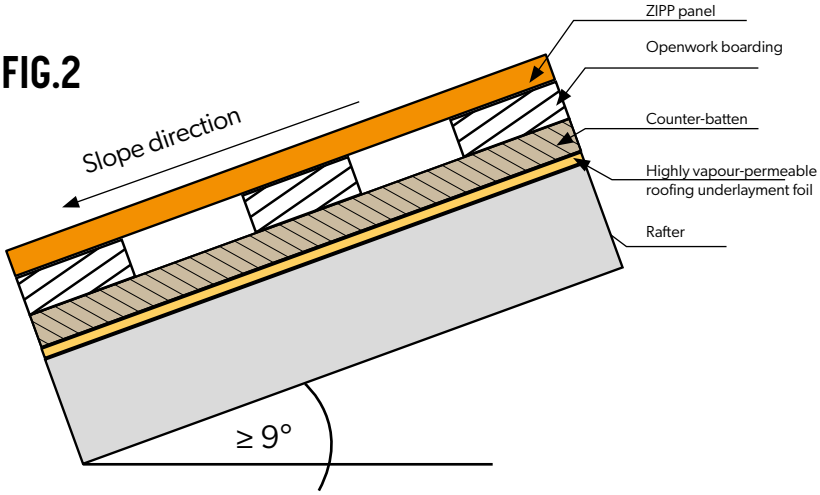

FIG.3

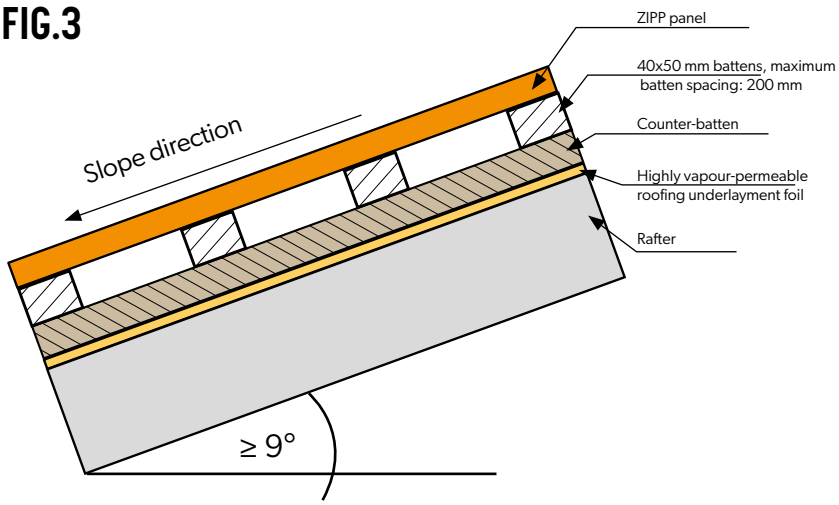

Failure to comply with the recommendations of mounting on battens may result in increased sheet waviness and increased noise caused by weather conditions, e.g. (wind, rain).

5. Roof structure

Before the assembly, check whether the construction is correct, including diagonals and flatness. The distance between the boarding and the eaves should be determined taking into account the installation of the ZIPP starting drip edge.

ZIPP roof panel can be used on roofs with a slope of not less than 9°. Installation on surfaces with smaller angles of inclination requires prior consultation with the manufacturer's technical advisor regarding the preparation of the roof base. Cutting sheets to size does not include bevels. The maximum length of a sheet in one section is 10 m.

ZIPP roof panels are recommended to be installed on a slope with full boarding. In order to lay the full boarding, install a highly vapour-permeable roofing underlayment foil on the rafters, then counter-battens and complete the full boarding. This way, the attic ventilation gap is provided. Install a spacer mat on the full boarding. Make sure that the roofing membrane is led out onto the starting strip and applied to it with system adhesive tape. This solution will also prepare the client's attic for thermal insulation.

Maintaining the utmost care in the preparation of the roof structure is of key importance for the aesthetics of the covering. Any errors made at this stage may result in visible waves and kinks on the surface of the panels.

NOTE! Due to the construction of the roof panels, the so-called sheet "corrugation" may occur on the covering. It is a natural phenomenon for this type of product.

FIG. 4 DIAGONAL CONTROL

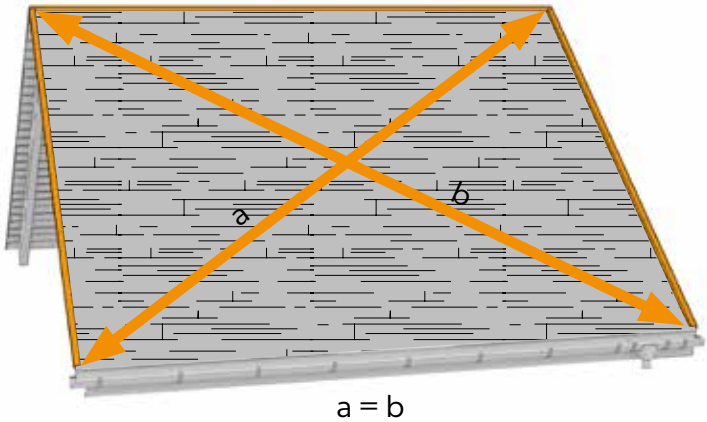

a = b

FIG. 5 FULL BOARDING OF THE ROOF AND SYSTEM ADHESIVE TAPE APPLIED TO IT

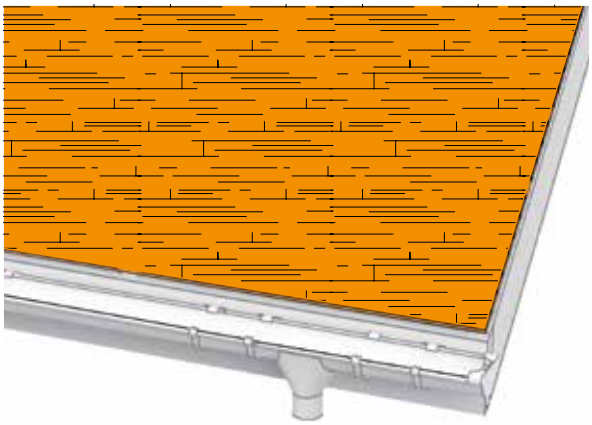

FIG. 6 MEMBRANE APPLICATION TO THE STARTING STRIP

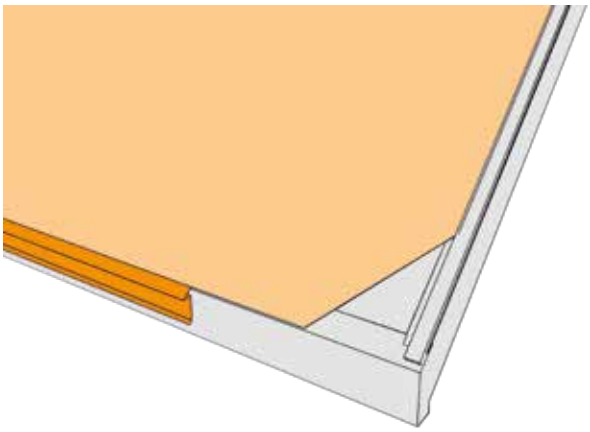

6. Installation of the starting drip edge

The starting drip edge is a flashing dedicated to LAMBDA 2.0, FIT and ZIPP roof panels. By equipping it with a protruding edge, it combines the functionality of the drip edge and the starting profile, allowing you to aesthetically display the fronts of the roof panels from the eaves side.

Once the eaves flashing (verge trim) and the gutter are installed, proceed to install the starting drip edge. It precedes the installation of roof panels.

The starting drip edge is mounted straight in the eaves line by fixing it to the first board (batten) with the use of dedicated plate mounting screws. The levelling should be checked before the complete fixation of the flashing.

If it is necessary to connect the starting drip edges, there should be overlays of min. 25 mm.

Mounting screws for the starting drip edge

Mounting screw
L 4.2 x 30 mm for wood

Mounting screw
L 4.2 x 19 mm for steel

FIG. 7 STARTING DRIP EDGE

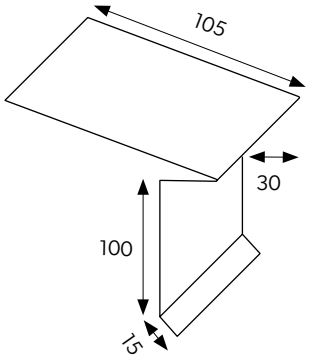

FIG. 8 STARTING DRIP EDGE - INSTALLATION

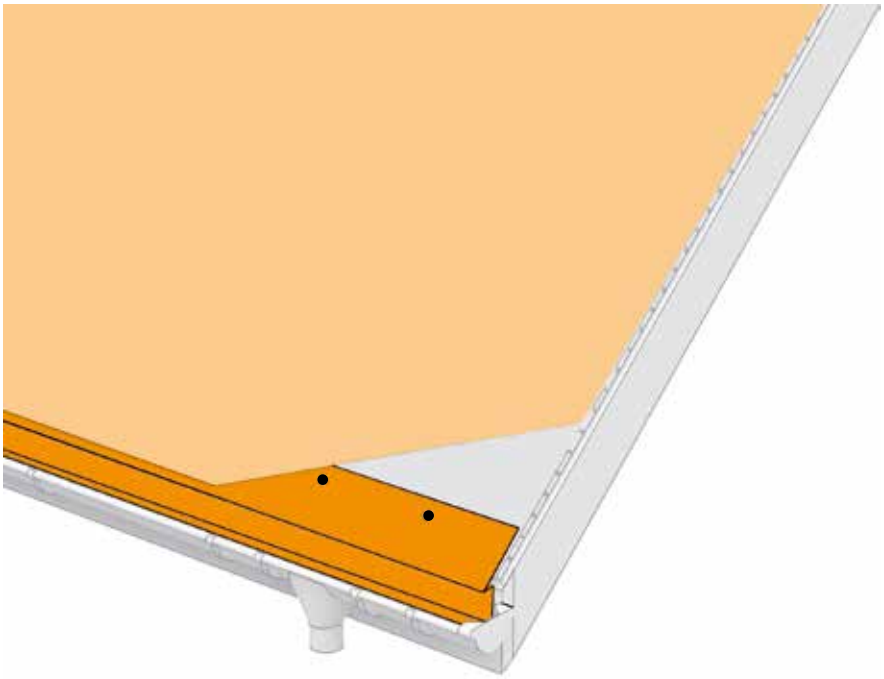

7. Spacer mat / braid-reinforced membrane

To ensure adequate ventilation of the roof, it is recommended to use a braid-reinforced membrane or a separate membrane with certificates for installation under a flat sheet.

If there is top roofing felt on the roof, install only the braid on its surface and proceed to the installation of ZIPP roof panels.

FIG. 9 SPACER MAT / BRAID-REINFORCED MEMBRANE

8. Wind brace strip

Along the edge of the roof, you can (as one of the solutions) install a batten, otherwise known as the batten of the wind brace. It is the support for the first roof panel and the wind brace.

Being accurate when assembling the edge board determines the even arrangement of subsequent panels.

FIG. 10 WIND BRACE STRIP - ONE OF THE POSSIBLE SOLUTIONS

9. First panel installation

The sheets of ZIPP roof panels should be hooked to the starting drip edge. The ZIPP roof panels are equipped with the BEND-LOCK solution, i.e. the factory cut of the front edge creating the so-called tongue (extension of the middle sections), making it easier to bend the panel to hook it to the drip edge (see Fig. 16).

Taking into account the suction forces occurring under the roof covering, after measuring the roof slope, the extreme widths of the panels should be selected so that they do not appear in full widths. For instance, if the roof slope consists of 10 full panels, start and end the covering with panel halves. In this way, you will thicken the edge fastening of the panels.

Before screwing the sheet to the structure, use a rubber hammer to gently push the bent edge to the starting strip, leaving a 10-15 mm expansion gap as shown in Fig. 11.

The sheets are screwed to the structure between the ribs (Fig. 12) at distances of 200 - 400 mm.

Before you proceed to roofing work, the roof surface should be planed. It is recommended that the first and last panels be narrowed in order to compact the edge and corner zones of sheet fastening.

FIG.11 HOOKING THE SHEET TO THE DRIP EDGE

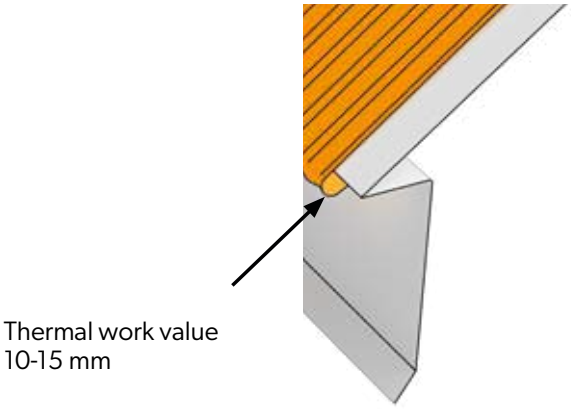

FIG. 12 FIRST PANEL INSTALLATION

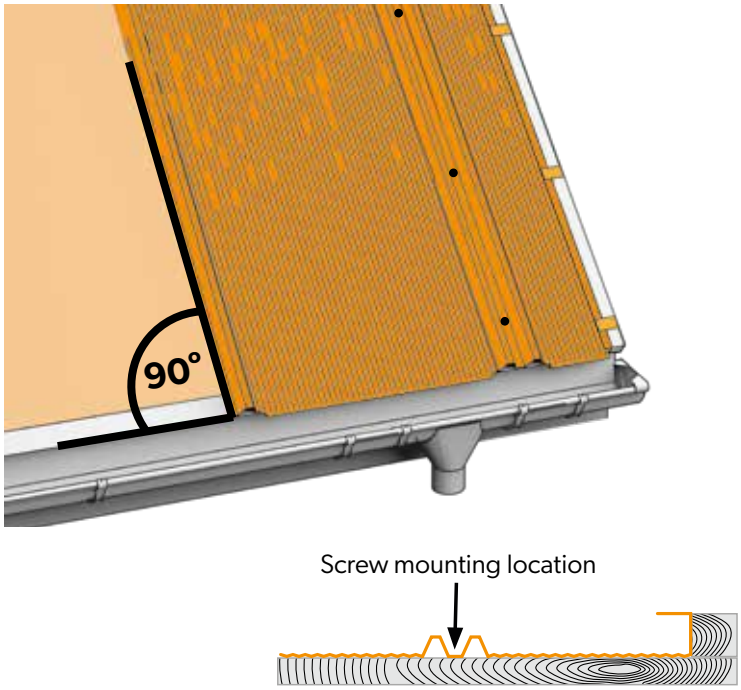

FIG. 13 ROOF LAYOUT

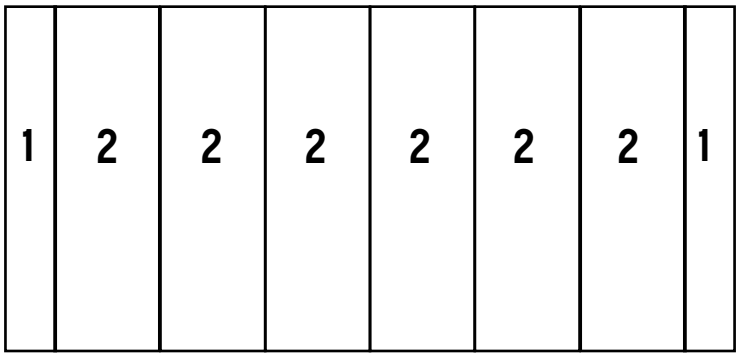

1. Edge panel
2. Full panel

10. Installation of edge panels

You can start assembling the panels from both right and left side. Along the edge of the roof, you can attach a batten (counter batten), cut the panel to the height of the batten + 20 mm for an angular hook (installation clip). Remember that the edge panels are of the same width, so it is important to check the geometry of the roof before proceeding to the installation. On the edge panels, thicken the installation clips - every 300 mm. The outermost panel should be fastened firmly enough to the batten of the wind brace with the use of hooks, which allow the panel to work along its length (fig. 15). Make sure that you leave an expansion gap of 10-15mm.

FIG. 14 CUTTING THE PANEL TO THE EDGE BOARD

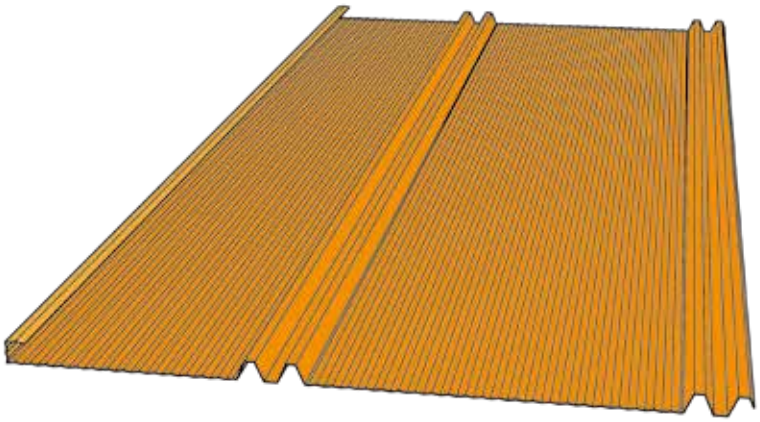

FIG. 15 ASSEMBLY OF INSTALLATION CLIPS (ANGLE CLAMPS)

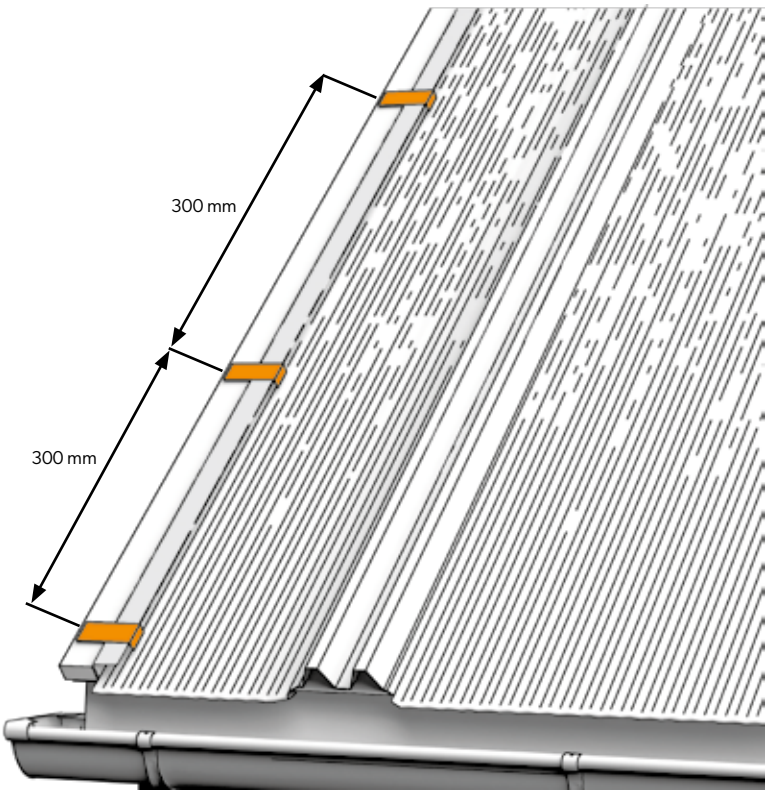

11. Installation of panels from the eaves side

For easy folding of the front edge, the ZIPP roof panels have been factory-fitted with „BEND-LOCK" tongues, i.e. an extension of the central section of the sheet, prepared for folding.

FIG. 16 ZIPP ROOF PANEL - PREPARATION FOR FOLDING

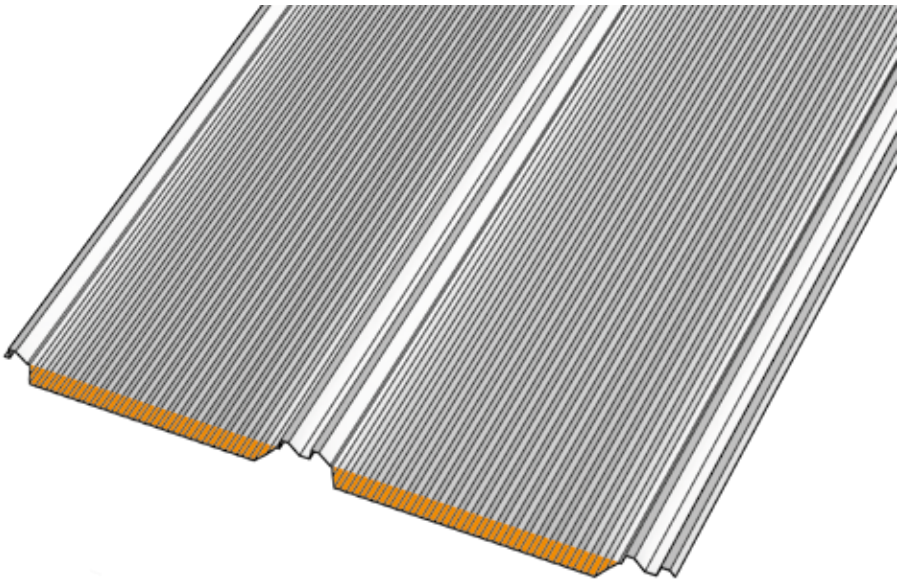

As mentioned above, ZIPP roof panels can be installed either left to right or right to left. At the same time, it should be remembered that due to the construction of an overlap, when assembling from right to left, each subsequent sheet is placed on the previous one, and in the case of assembly from left to right, each subsequent sheet is placed under the previous one, as shown in Figure 17.

FIG. 17 JOINING THE PANELS HORIZONTALLY

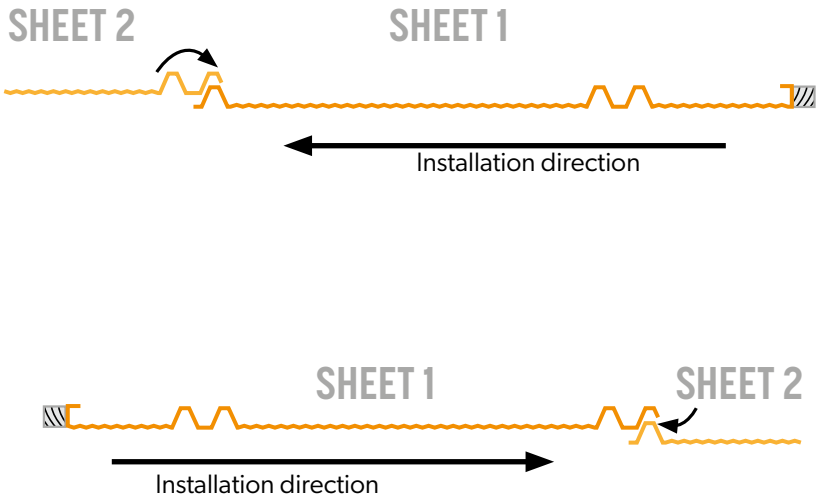

Next panels are installed first by fastening the BEND-LOCK fold to the starting drip edge, and then by snapping the lock along the entire length of the sheet.

FIG. 18 FASTENING THE SHEETS TO THE STARTING STRIP

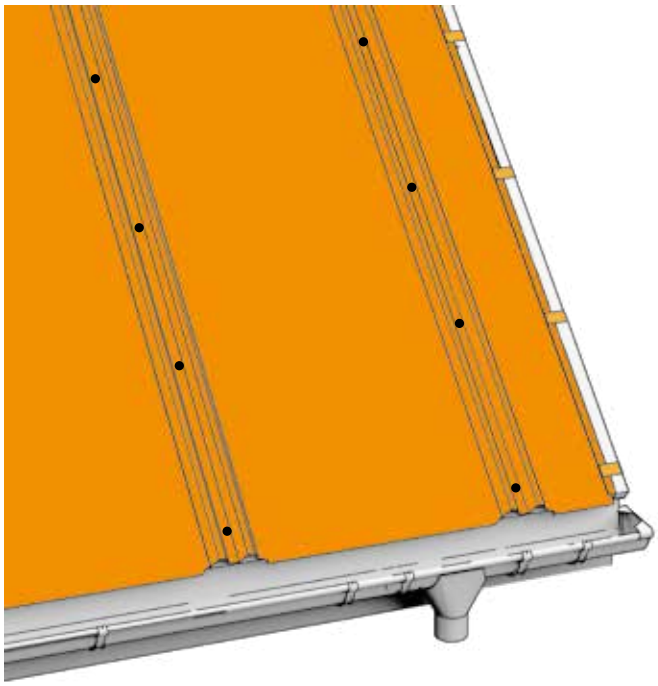

FIG. 19 SETTING THE OVERLAPS

12. Connecting panels along the length.

If the roof length exceeds the maximum productive length of the panels, a lengthwise connection is recommended. The best method in terms of efficiency and aesthetics is the use of a dedicated flashing-panel connector.

We connect ZIPP roof panels in one line. For this purpose, a panel connector should be mounted to the bottom panel. It will serve as a starting strip for the top panels. When determining the installation height of the panel connectors, it is necessary to anticipate the value of the panel overlap to be achieved. As we pierce the bottom panel with the screws, the surface between the sheets should be sealed. Use the sealing tape or roofing sealant for this purpose. Use the seal on the entire surface between the seams, even where there is no panel connector anymore. It is designed to maintain tightness and prevent capillary rising of rainwater.

The overlap at the longitudinal joint should be 120 - 250 mm long, depending on the angle of the roof inclination.

FIG. 20 CONNECTOR FOR ROOF PANELS

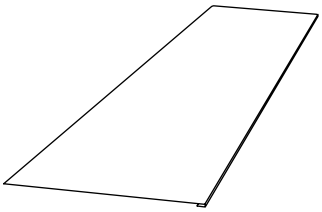

FIG. 21 INSTALLATION OF PANEL JOINTS

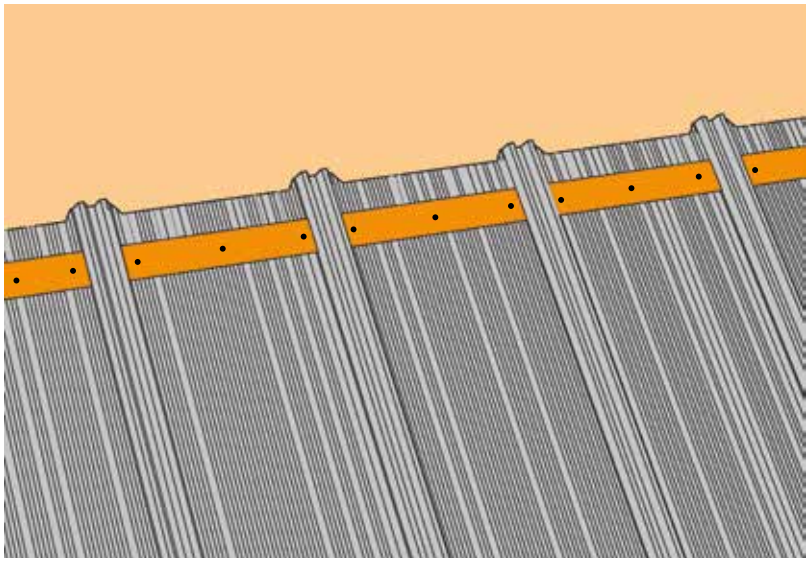

The overlap at the longitudinal joint should be 120 - 250 mm long, depending on the angle of the roof inclination.

Next panels are connected by hooking them first to the connector, then placing them on the previous one.

FIG. 22 CONNECTING PANELS ALONG THE LENGTH.

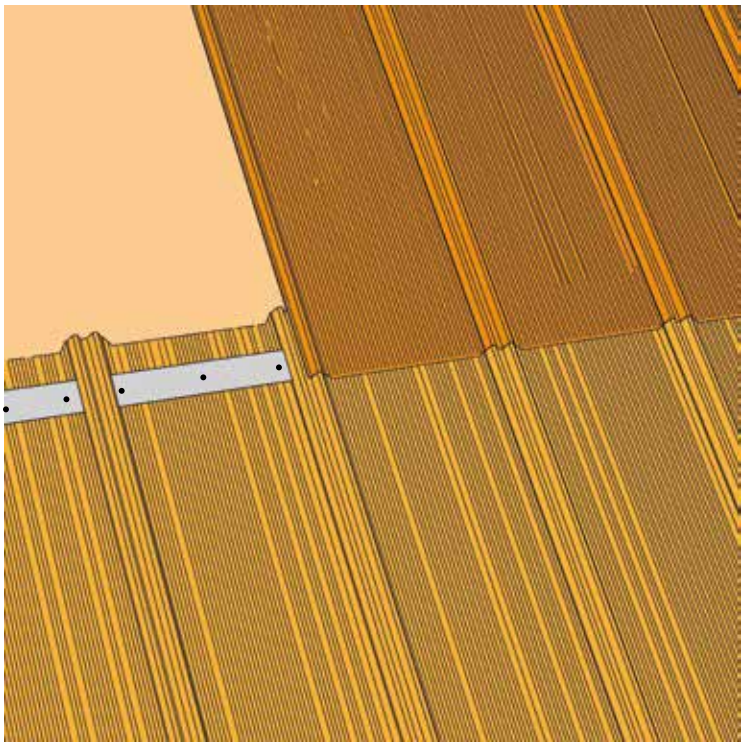

After fastening the top panel with the connector, set the overlaps and then, using a block and a tinsmith hammer, snap the lock. After that, we can finally screw the panel to the structure.

FIG. 23 SETTING THE OVERLAPS

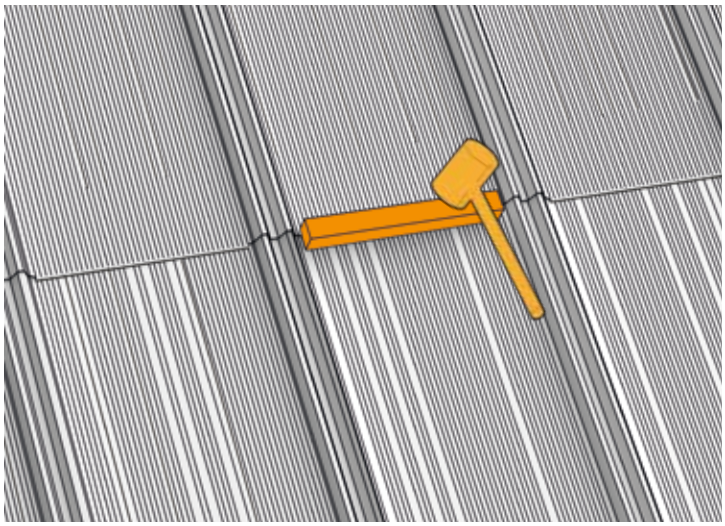

13. Wind brace installation

The edge part of the roof slope is the area where high suction forces occur. Therefore, it is necessary to use compacted fastening.

The outermost panel should be attached firmly enough to the batten of the wind brace with the use of installation clips that allow the panel to work along its length. Thickened fastening guarantees resistance to the suction forces occurring on the extreme part of the roof slope.

Then, we vault the fold of the extreme panel and embroider to the patch.

FIG. 24 ASSEMBLY OF THE WIND BRACE

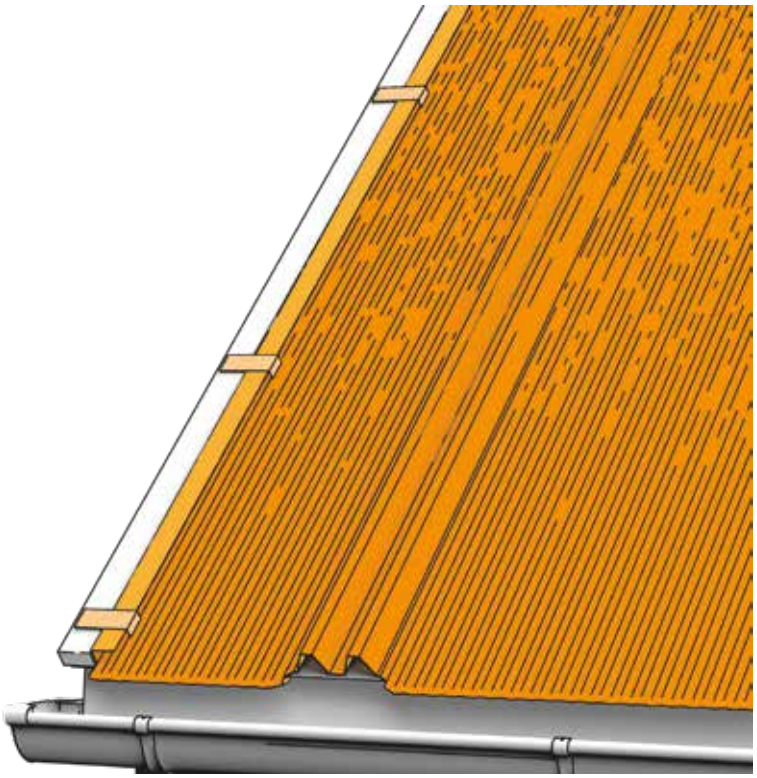

FIG. 25 ASSEMBLY OF THE WIND BRACE

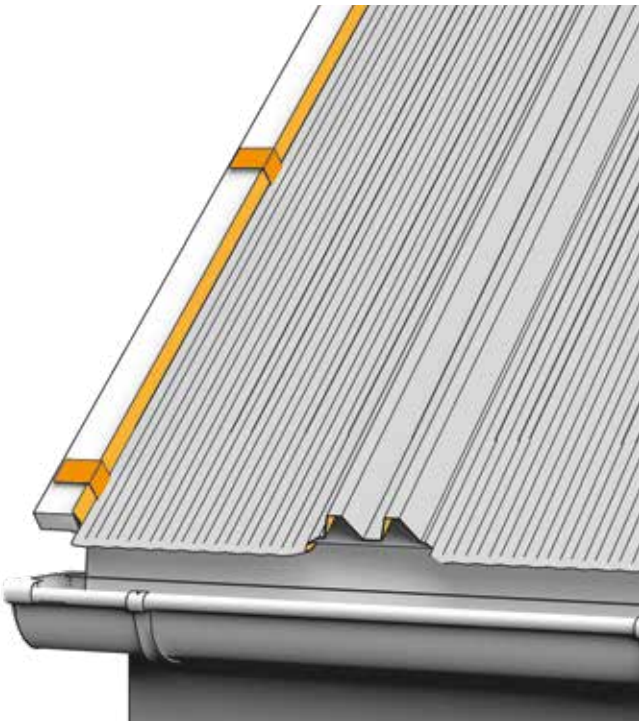

Farmer screws should be used to mount the wind brace. When connecting the wind braces, use an overlap of 15-30 mm. For more skilful roofers, we recommend installing the wind braces using separate starting strips. In this way, you eliminate visible screws and significantly improve the aesthetics of the work. This aspect is discussed in BP2 workshops.

FIG. 26 ASSEMBLY OF THE WIND BRACE

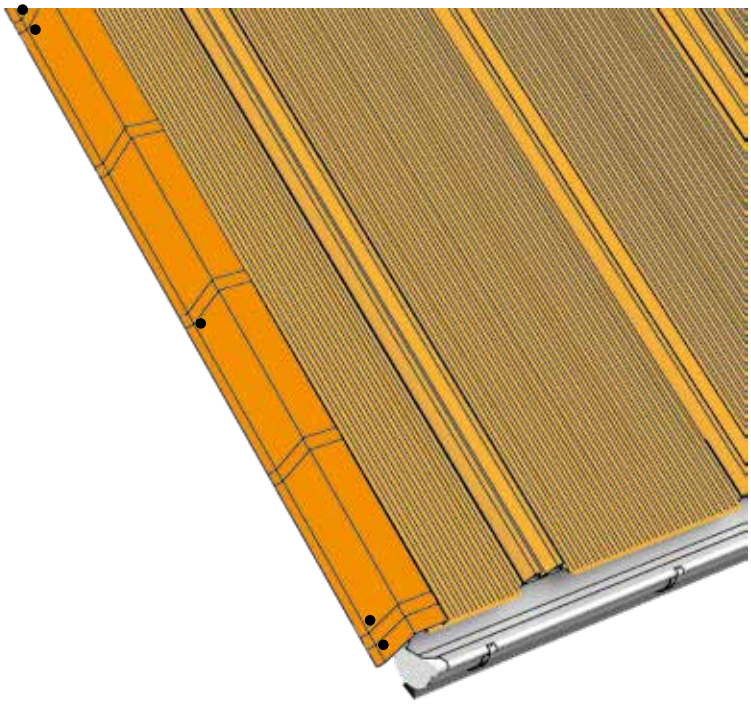

14. Installation of universal ventilation and ridge tiles

Universal ventilation flashing for full roofs. Thanks to perforations, it ensures proper ventilation of the covering.

ASSEMBLY TIP

Before assembly, cut universal ventilation flashings in order to ensure full adherence to the panels.

FIG. 27 UNIVERSAL VENTILATION FLASHING

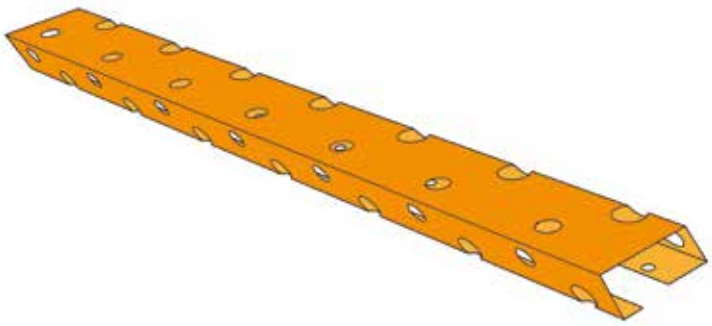

FIG. 28 ASSEMBLY OF THE UNIVERSAL VENTILATION FLASHING

Before fixing the ridge tile, install a universal ventilation flashing. Use farmer screws 4.8 x 20 mm or „L" 4.2 x 30 mm mounting screws (two ventilation flashings are required for one sheet of **ZIPP** panel reaching the top).

The universal ventilation flashing must be installed using the installation hole in the bottom flashing edge. Insert the screws through the larger pilot hole in the top edge, as presented in the cross-section.

We recommend sealing the assembled flashing as in the case of the connector. This aspect is discussed in detail in the BP2 workshops.

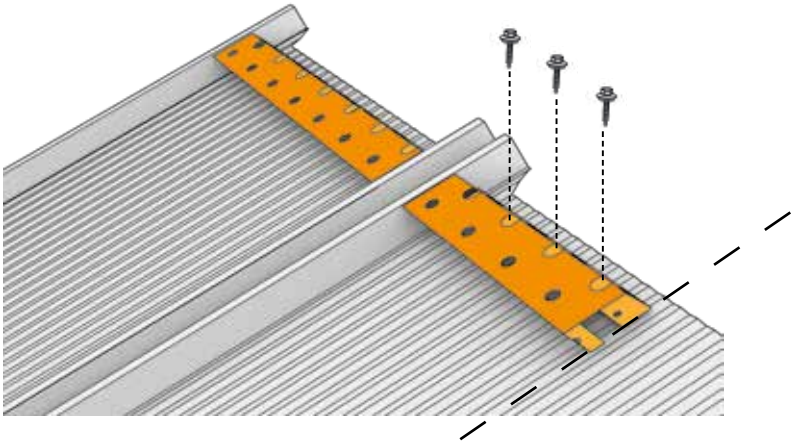

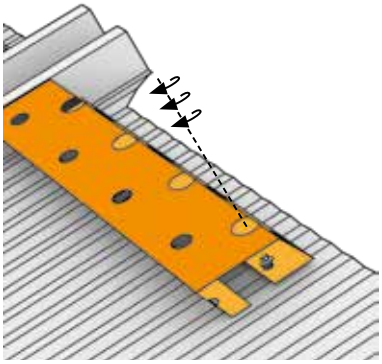

FIG. 29 RIDGE TILE INSTALLATION

The ridge tile is screwed to the universal ventilation flashing with 4.8 x 20 mm farmer screws, at least every 300 mm, "sheet to sheet", previously adjusting its opening to the roof angle.

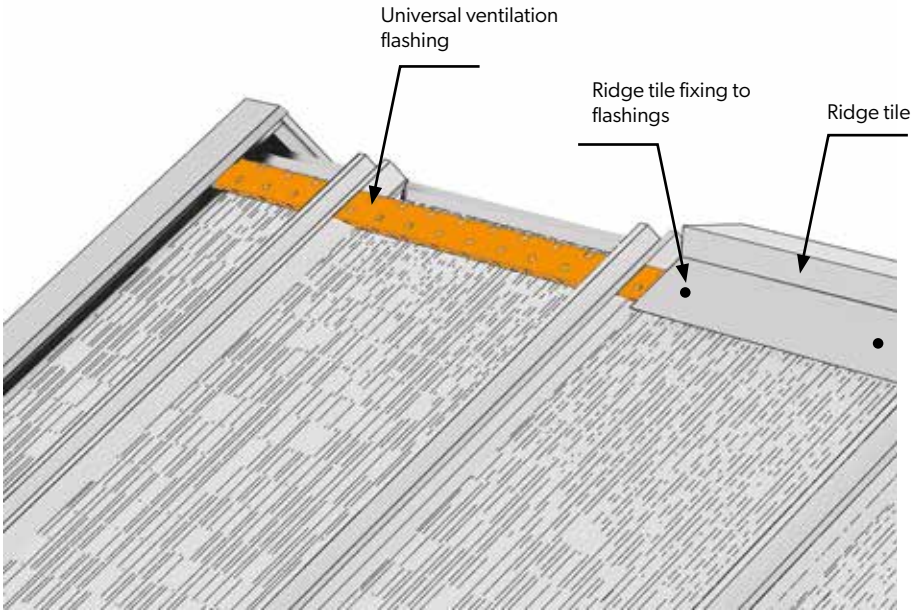

15. Valley gutter installation

The assembly of the valley gutter begins with adjusting it to the corner. When marking and cutting off the desired shape, a 30 mm overlap should be used to make the fold to the starting strip.

FIG. 30 VALLEY GUTTER INSTALLATION

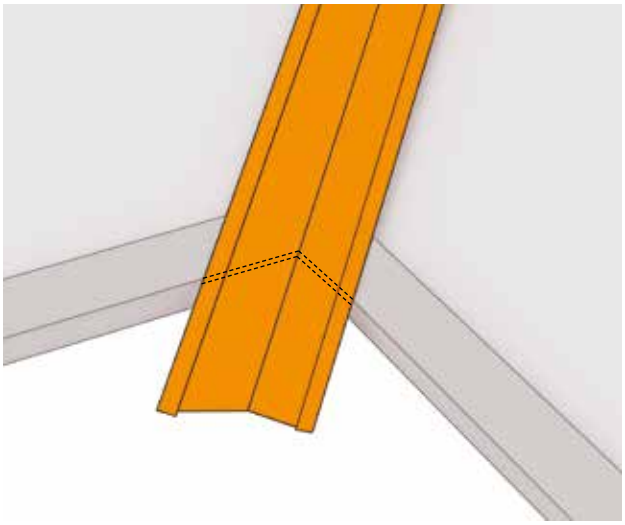

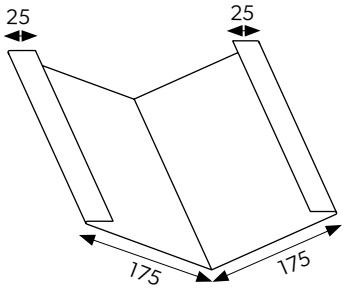

Using the fold, fasten the gutter to the starting strip and attach it to the structure from the eaves to the ridge using installation clips. Remembering to adjust the appropriate overlap to the angle of the roof slope.

FIG. 31 ASSEMBLY OF THE VALLEY GUTTER

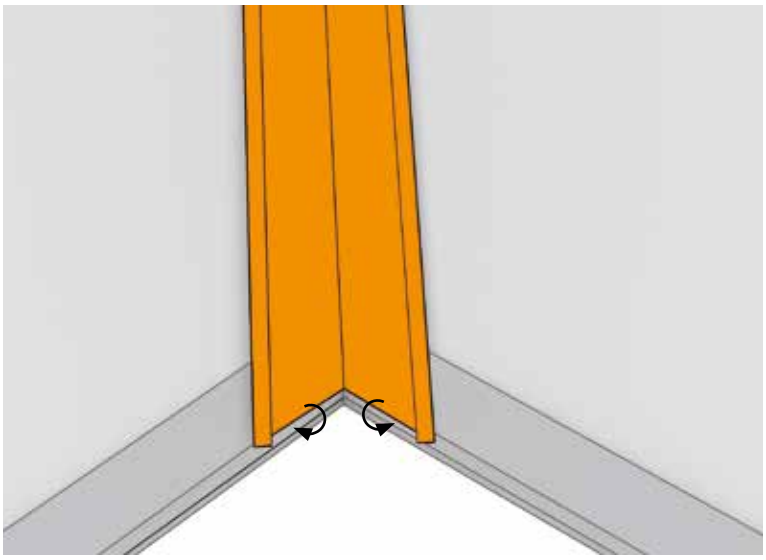

FIG. 32 CUTTING THE PANELS TO THE VALLEY GUTTER

Before cutting and assembling the panels adjacent to the valley gutter, the angle should be measured by making a template made of slats.

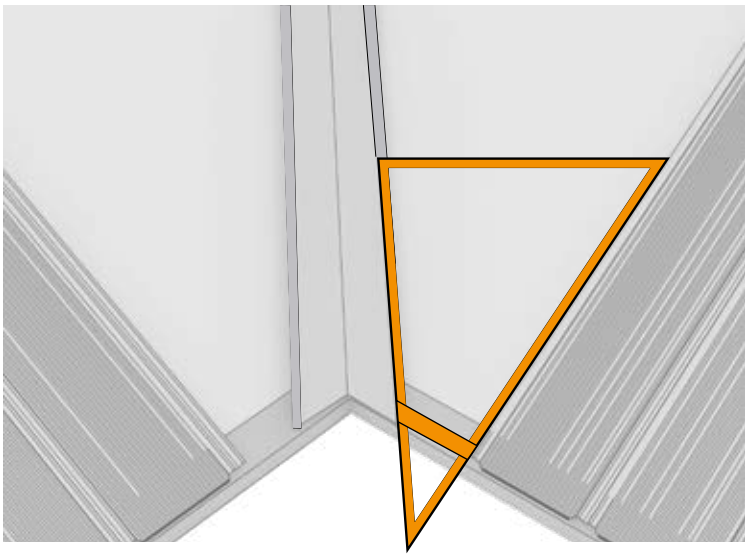

Then, using the template, cut the panel, leaving a 30 mm overlap to prepare a fold to the valley gutter.

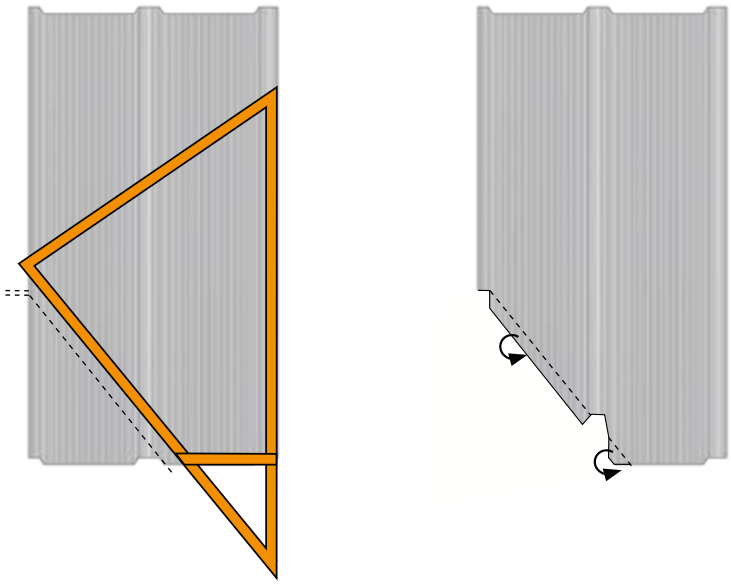

FIG. 33 FITTING THE PANELS TO THE VALLEY GUTTER

Then, we hook the panel to the edge of the valley gutter.

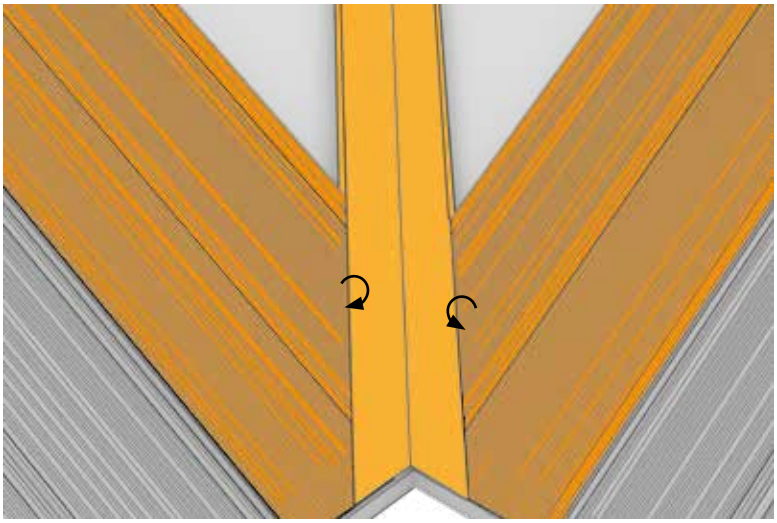

16. Wall flashing installation

In this manual, we present one of the possible solutions.

The first step is to prepare and attach to the roof the grips that will be used to fix the edge panel. Such grips can be prepared from strips of steel sheet folded at right angles. In the discussed solution, the wall flashing is the bend of the edge panel against the wall. This fold must be min. 200 mm. Therefore, the section of the grip adjacent to the wall should be sufficiently longer than the bend of the edge of the panel so that the connection can be made.

The flashing made of the edge panel should be at least 200 mm high. Moreover, its upper edge should be folded up, which will allow for a secure connection with the previously prepared grips, not requiring additional fastenings.

FIG. 34 INSTALLATION OF CLAMPS ON THE PANELS

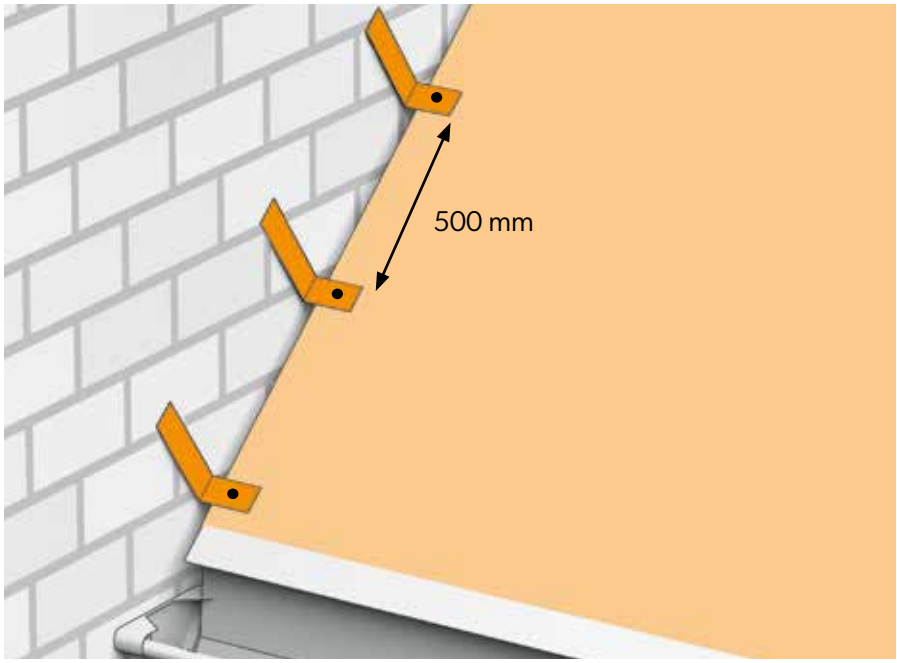

FIG. 35 WALL FLASHING INSTALLATION

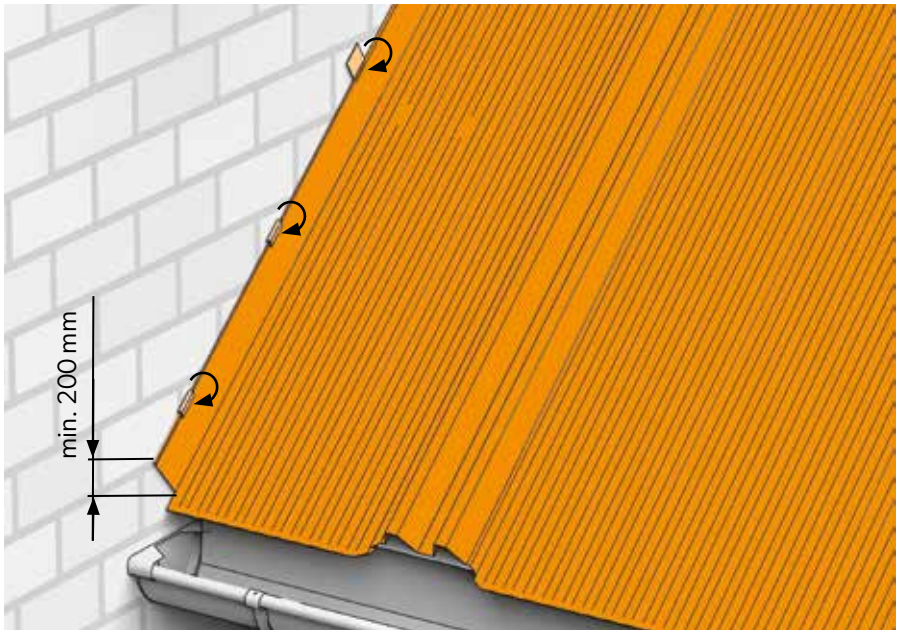

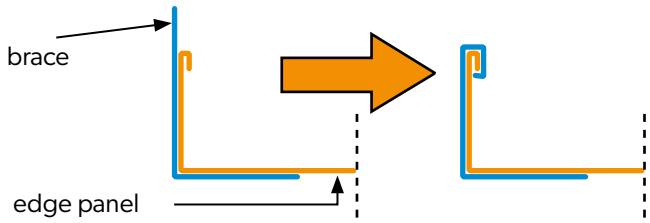

FIG. 36 EXPANSION STRIP INSTALLATION

The joint with the wall should be protected with an expansion strip, and if necessary, additionally sealed with roofing sealant.

The expansion strip must be attached to the wall.

Notes

BLACHPROFIL 2® Sp. z o. o.
ul. Nadwiślańska 11/139
30-527 Kraków
NIP: 6762431701

+48 12 415 55 51
centrala@bp2.eu
bp2.eu

Zakłady produkcyjne:
Production Plants:

Grojec, ul. Grojecka 39
32-566 Alwernia k/Krakowa

ul. Budowlanych 10
41-303 Dąbrowa Górnicza

07/2022/**EN**